REVISION HISTORY			
REV	DESCRIPTION	DATE	APPROVED
A	WAS .375-18UNC	11/13/02	GCS

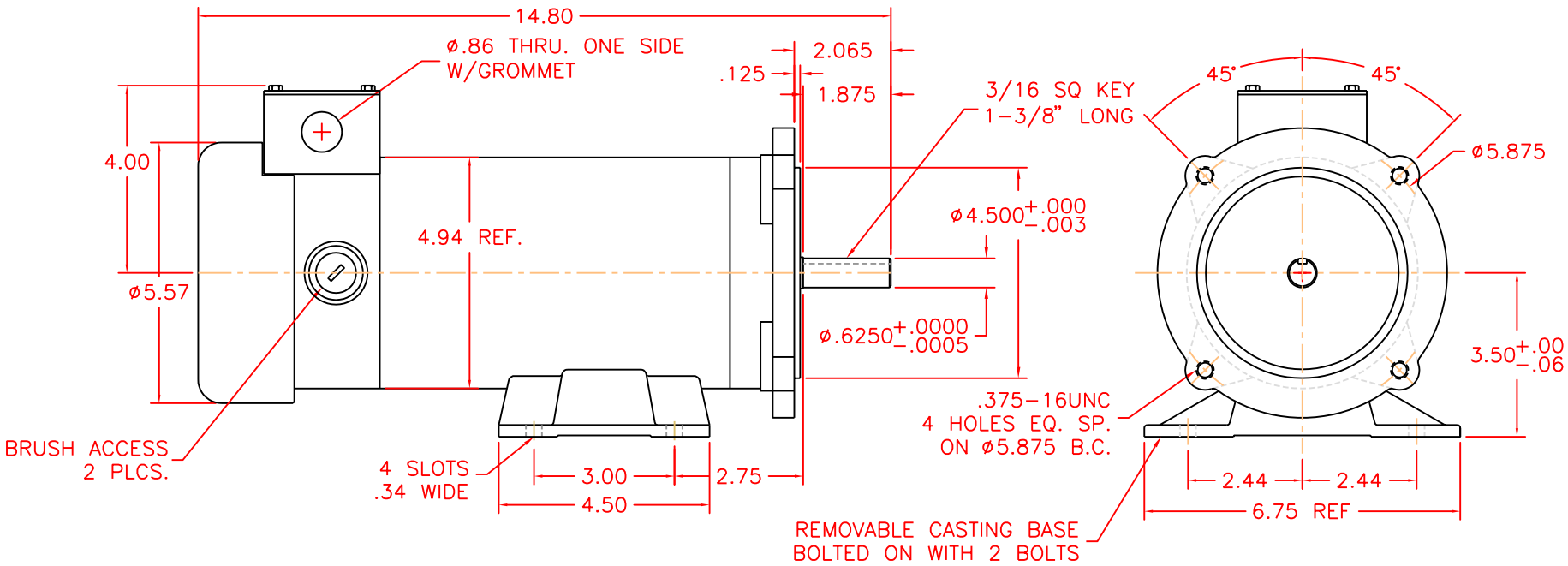

NOTES:
1. PM DC MOTOR, 1HP/90VDC/1750RPM, W/FOOT;
2. MODEL NO.: 1015MD0081;
3. USE BRUSH SP0087X.

UNLESS OTHERWISE SPECIFIED
ALL DIMENSIONS ARE IN INCHES
INTERPRET DIM AND TOL PER ASME Y14.5M - 1994
TOLERANCES:
DECIMALS .XX ±.010 .XXX ±.005 .XXXX ±.0005
FRACTIONAL ± 1/32
ANGULAR ± 30'
BREAK ALL EDGES
ALL HOLES CHAMFERED .01X45°
SURFACE ROUGHNESS: 125µin BEFORE PLATING
THIRD ANGLE PROJECTION

THIS DRAWING AND THE INFORMATION ON IT ARE THE PROPERTY OF HALLMARK INDUSTRIES, INC. AND IS NOT TO BE USED OR DUPLICATED WITHOUT PRIOR AUTHORIZATION

HALLMARK INDUSTRIES, INC.
733 BROOKDALE DRIVE, SCHAUMBURG, IL 60194 PHONE: (847)882-8821 FAX: (847)882-5658

TITLE: DC MOTOR, 1HP/TEFC
1750 RPM/90V/56C W/FOOT
MODEL #: 1015MD0081

DRAWN	DRAWN DATE	CHECKED	CHECK DATE
GCS	10/22/02		

SIZE	DWG. NO.	REV
B	MD0111X	A

SCALE	ALT. NO.	SHEET
1:2		1 OF 1